82-Catalog
117

VÖEST

Lathe

Type DA 1 and DA 1.5

16 1/2

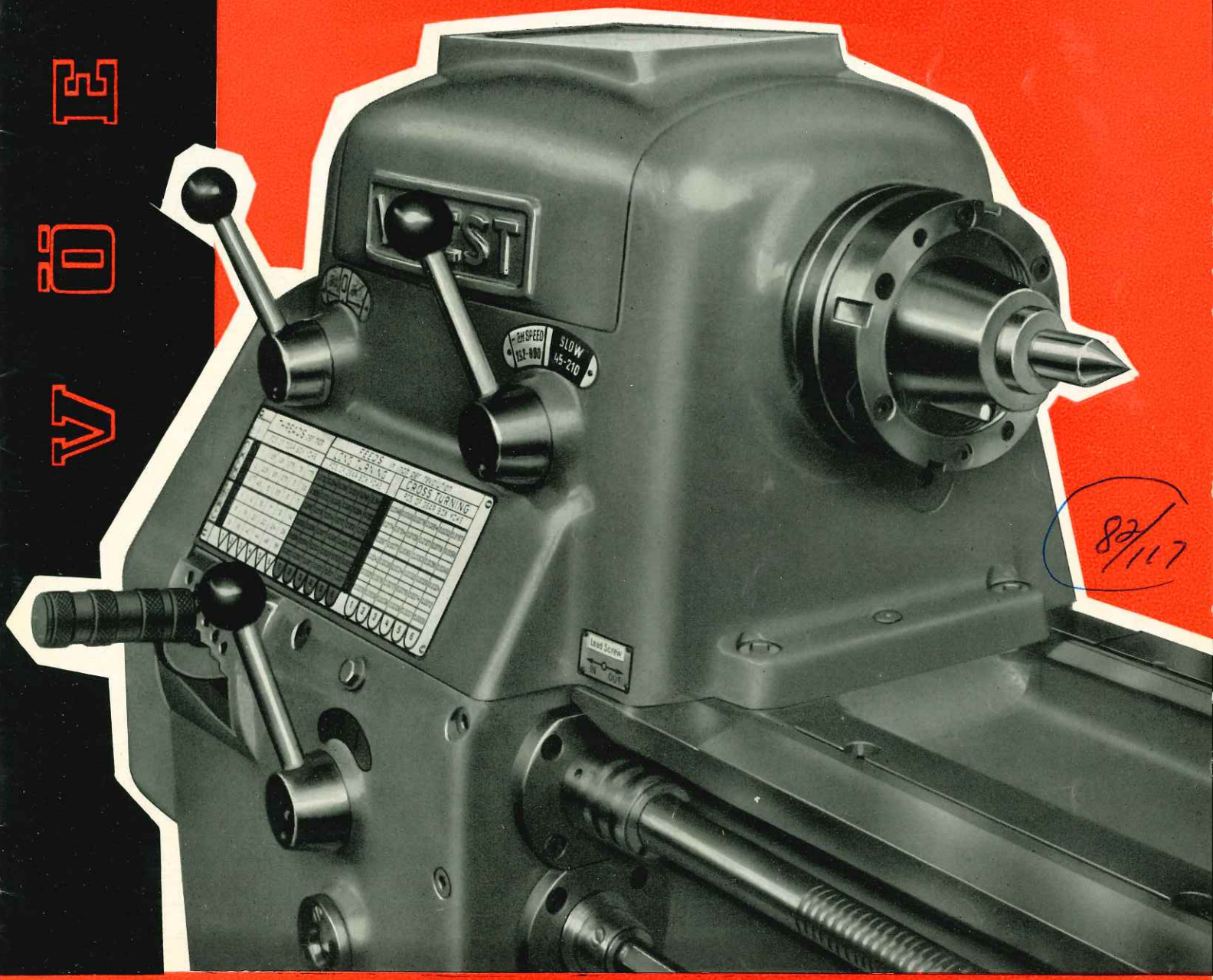

82/117

VEREINIGTE ÖSTERREICHISCHE EISEN- UND STAHLWERKE, LINZ-DONAU, AUSTRIA

ERIC R. BACHMANN CO., INC.
QUALITY MACHINE TOOLS
27-11 41st Avenue, Long Island City 1, N. Y.
Phone: EXeter 2-1555

VÖEST Engine Lathe

MODEL DA 1 . . . 16½" × 40"
MODEL DA 1.5 . . . 16½" × 60"

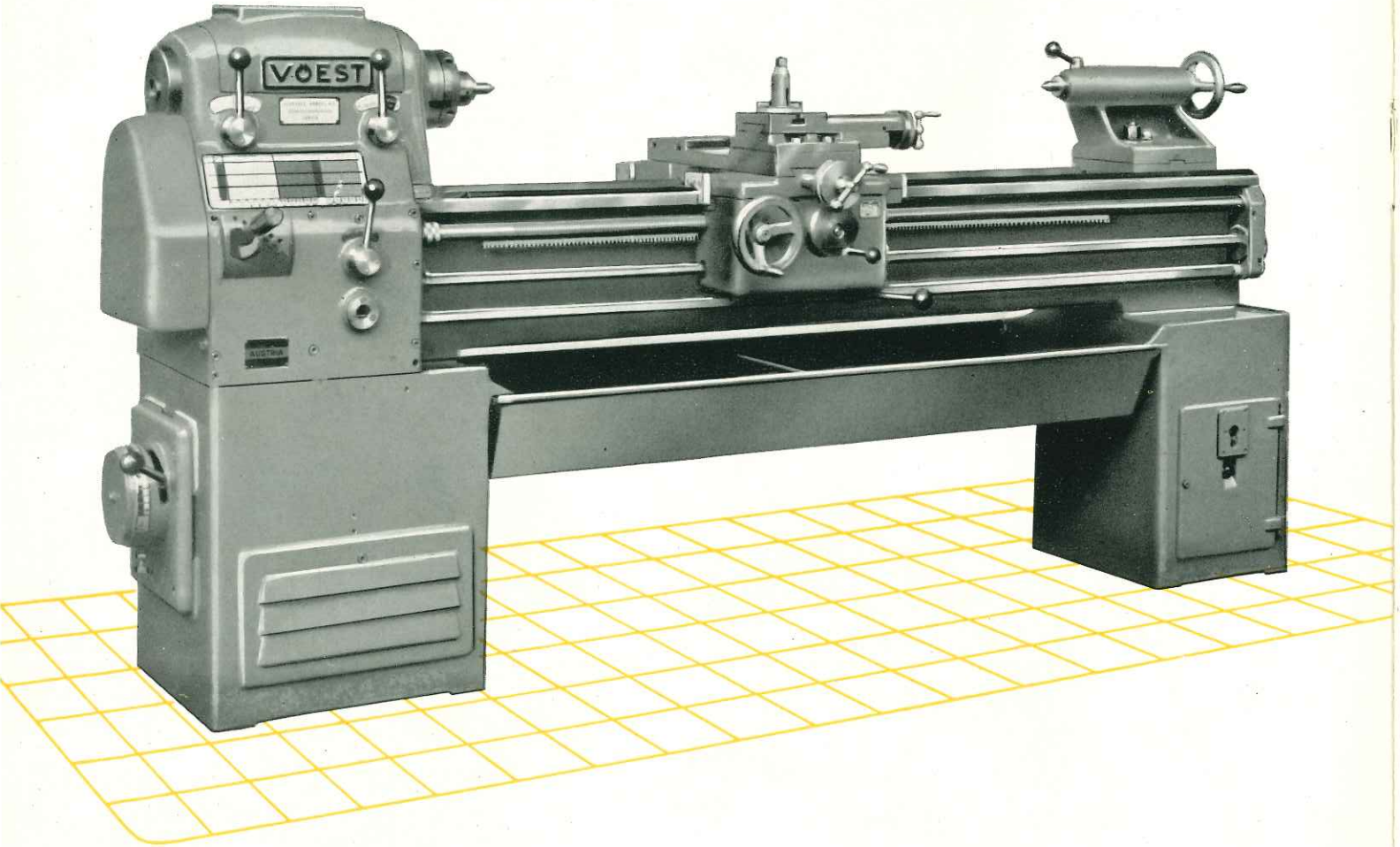

The Lathe, Model DA, is an all purpose machine of advanced design.
Its various elements are selected and coordinated with the utmost care. Although the low price demands a strict economy of construction, the quality of material and workmanship is in no way affected.
This machine is intended, first of all, for the small workshop, but it can be equally used to advantage in any kind of repair shop of an industrial or other private or public enterprise. It is also suitable as a production lathe with remarkable precision for machine factories.
This machine is extremely handy and permits a control of all stages of operation in a minimum of time. The dimensions of all parts are ample and the whole arrangement is especially clear.
This Lathe has a capacity of 60" (model DA 1.5) and also of 40" (model DA 1) between centers. Model DA 1.5 is provided with a removable bridge to allow 22½" swing over an 11" gap.

The Bed:

The bed is wide and strongly designed, and provided with heavy zigzag ribbing. The bedways are hard-cast according to a special process. The bed of the longer lathe is especially braced under the bridge thereby avoiding any distortion after the removal of the bridge.

The Headstock:

The spindle is fitted with a double row adjustable roller bearings and three heavy duty ball bearings, also all highspeed secondary shafts are fitted with ball bearings. The L_0-Keyed Taper Spindle Nose is hardened. The strongly built headstock accommodates a 5 multiple V-section belt pulley which takes the driving force from the variator in the lathe leg over an intermediate drive. A back gear to be set only while the machine is stopped, is also accommodated in the headstock. Any belt pull on the spindle is compensated. Increased speed has no influence whatsoever on the smooth running of the spindle.
The main drive gears are tempered and ground.

Gearing:

The variator is a stepless cone pulley V-belt drive with a variation range of 1 : 4.7. It is a completely separate element accommodated in the lathe leg. It is connected with the spindle by means of 5 V-belts over an intermediate drive. The special design of the belt for the variator, warranting a minimum of wear, is the result of a long range of tests. The belt can be easily exchanged by a simple manipulation. Extra belts are furnished with the Lathe.

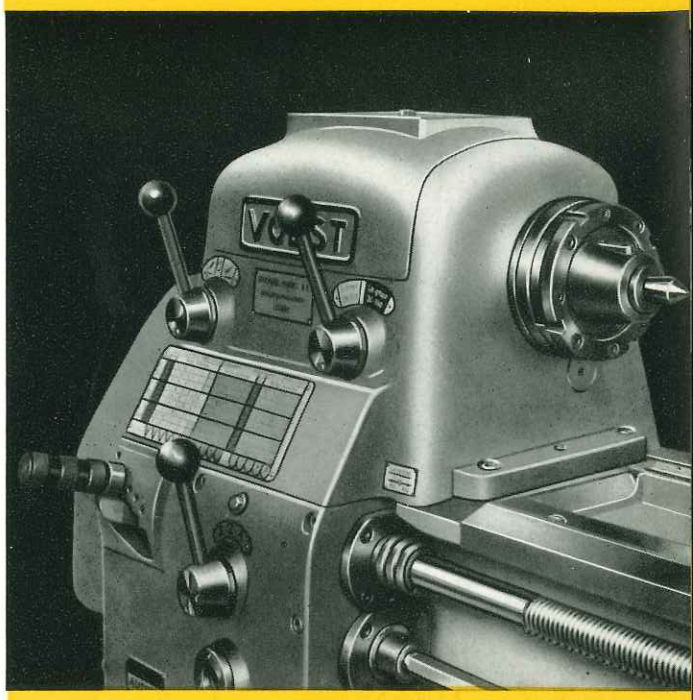

"Long taper key drive"-Spindlenose
L_0 according to U. S. A. Standards

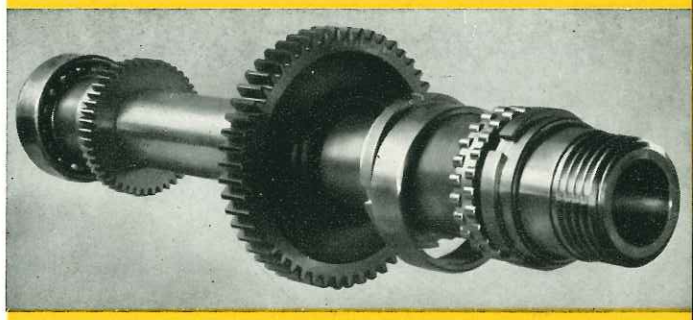

Ordinary spindle with threaded nose

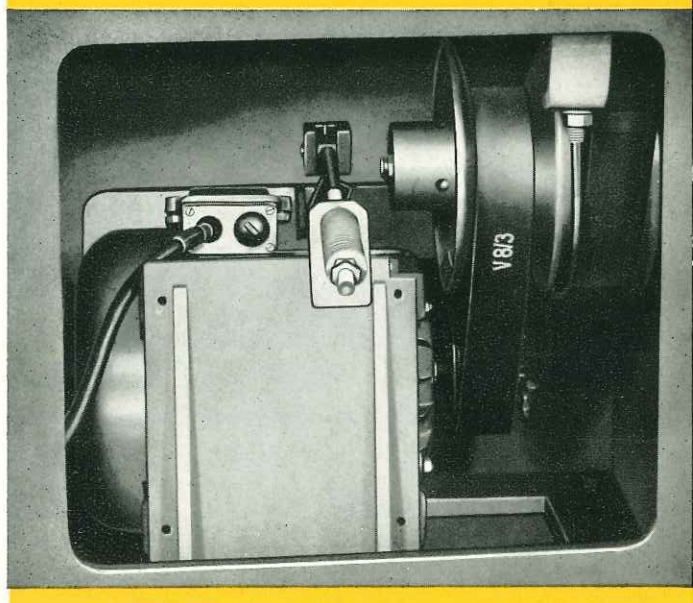

Variator drive

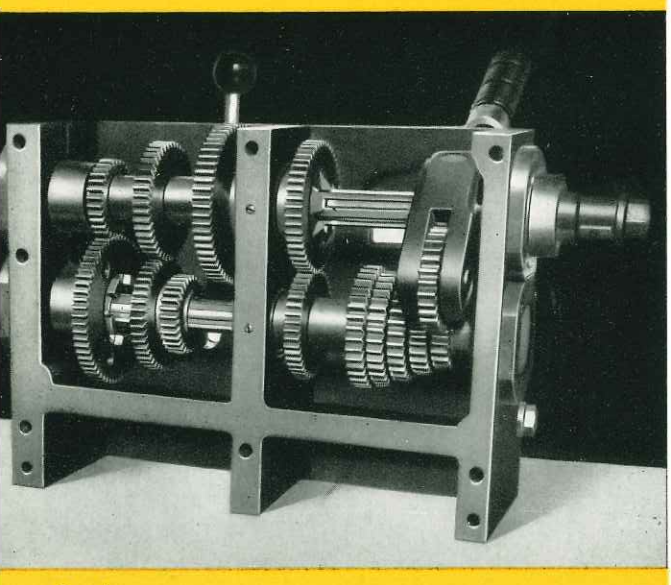

Gear box

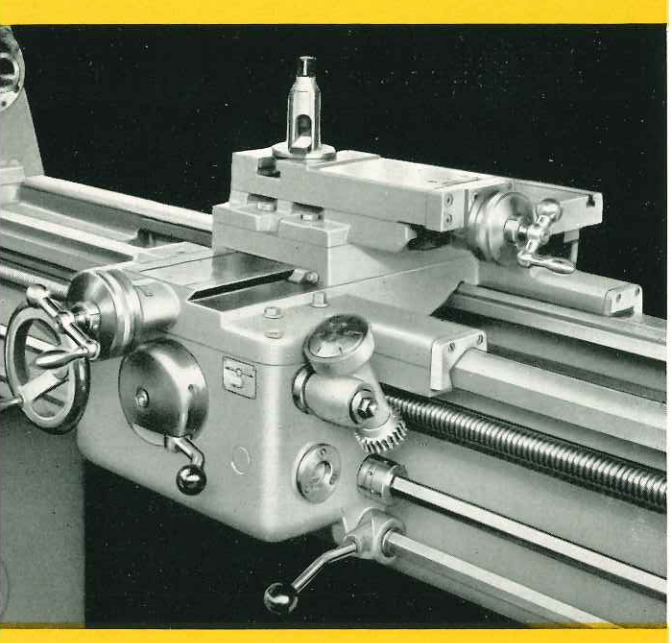

Carriage

Thread chasing dial

The Gear Box:

By means of a yoke, a group of 12 thread (metric) or 18 (inch system) can be set directly without changing gears. In order to cut Whitworth thread instead of metric thread, it is only necessary to exchange the intermediate gear in the box; for modul thread, two gears must be exchanged. The lead screw can be disengaged. Fifteen feeds can be directly controlled for long and cross turning. All shafts of the gear box are running on roller bearings.

The Carriage:

The carriage slides on vee and flat ways. The apron is completely closed. All gears and shafts are running in an oil bath. Longitudinal and cross feed, also the screw cutting mechanism are controlled by a single lever. The drive acts by means of a lead screw and feed rod. On the rear of the carriage a double slotted chuck plate for the cutting tool or the drilling rod holder is arranged, and on the compound rest a tool holder. If desired, a special type of machine with a compound rest equipped with a square turret instead of the standard tool holder may be delivered. The handscrews are provided with direct reading feed dials. A safety sliding clutch is built into the apron which protects against overload.

The Tailstock:

The tailstock is guided on a separate vee and can be set over by approx. ± 0.25″ on its supporting plate, thereby suitable for small taper turning.

Electrical Equipment:

The Lathe is driven by a specially designed 3 to 3.6 HP three phase squirrel-cage induction motor. The motor is properly insulated electrically. A lever on the control shaft controls clockwise and counter-clockwise turning, as

well as stopping. The control is effected by means of a contact pin on the control shaft acting upon a reversing device; apart from reversing, a braking effect by means of the counter-current is made possible in this way. The main switch is of the pushbutton type. With the main switch on, the voltage in the main is indicated by a control lamp. Apart from the contact pin for the reversing device all controls are united in the form of a switchboard on the inside of the front cover of the right leg.
For U.S.A., Canada, etc. the electrical equipment will be furnished acc. to prescription.

Main Data:

The Lathe is delivered for two ranges of speeds. In the standard type, the variator in combination with the cog-wheel gear, gives two stepless speed ranges: From 30 to 140 r. p. m. and from 128 to 600 r. p. m. The corresponding figures of the high-speed type are 45 to 210 r. p. m. and 192 to 900 r. p. m. The change from one range to the other is effected by means of a lever on the headstock while the Lathe is stopped. Within one range, a continuous variation during the operation is possible.

Feeds an pitches:

The following pitches can be set directly:

Metric:

1, 1.25, 1.5, 1.75, 2, 2.5, 3, 3.5, 4, 5, 6 and 7 millimeters pitch.

Whitworth:

24, 22, 20, 16, 12, 11, 10, 8, 6, 5.5, 5 and 4 threads per inch.

Modul:

0.5, 1, 1.25, 1.5, 1.75, 2, 2.5, 3, 3.5.

18 Longitudinal feeds . . 0.07 —0.001"
18 Cross feeds . . . . . 0.035—0.0006"

The Lathe is normally built with a lead screw according to U.S.A.-Standards with a lead of 4 T. P. I. Metric threads can be also cut (see next page).

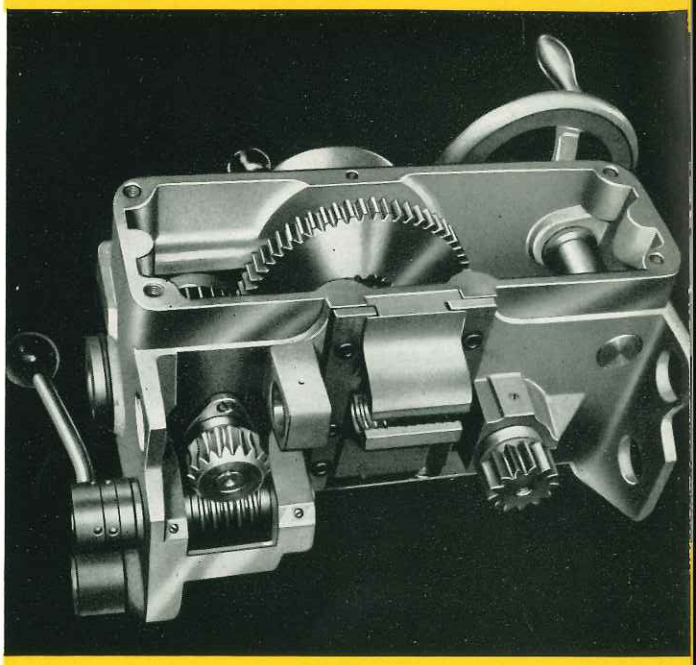

Apron

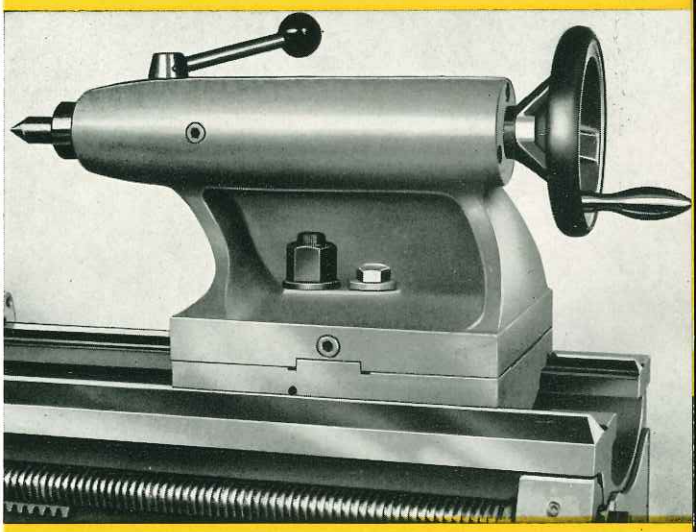

Tailstock

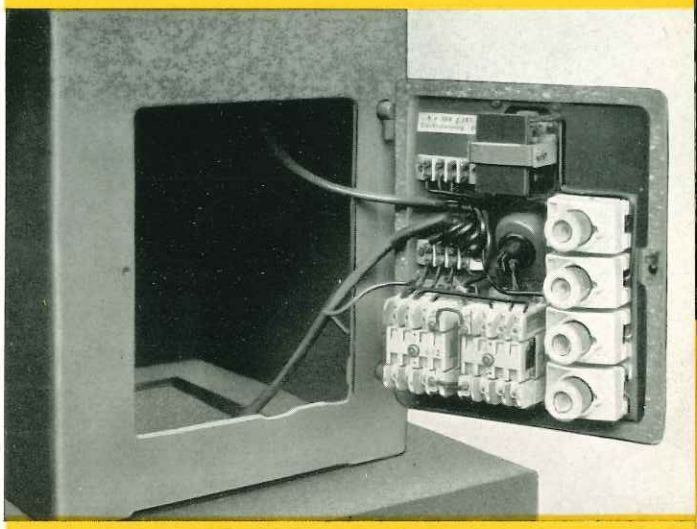

Electrical controls

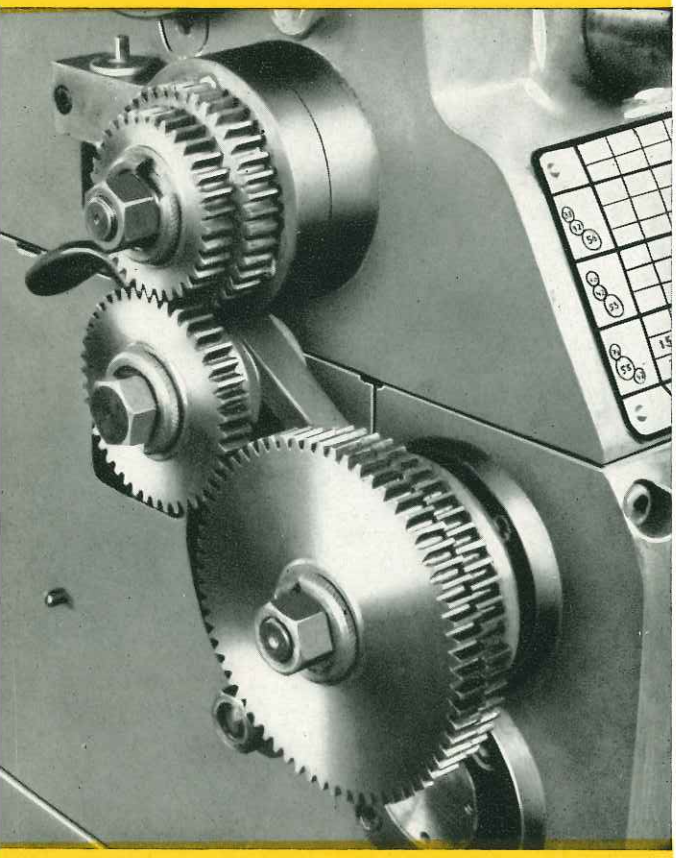

Change Gears

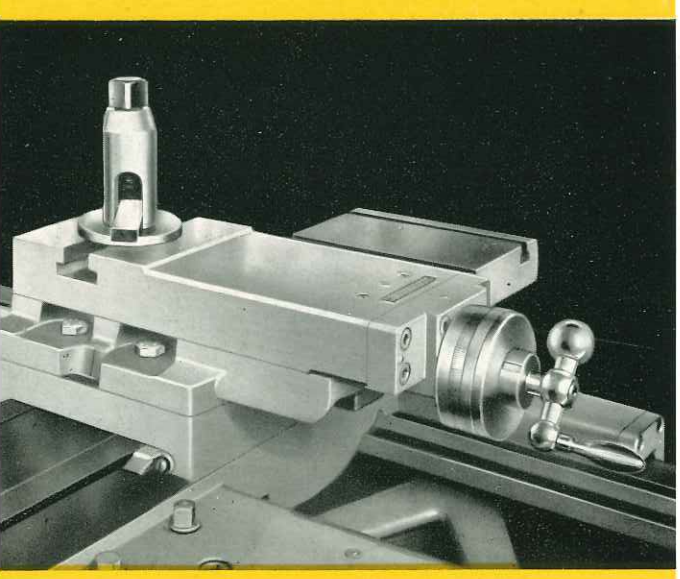

Standard tool-post (U. S. A.)

Threads with metric lead screw:

The following cog wheels are set on the Lathe	33, 40, 42, 63, 66,
additional	30, 34, 36, 45, 51, 54, 56, 57, 60, 65, 75, 80
With them pitches ranging from 0.3 mm. to 40 mm. can be cut, i. e. totalling to 72 metric threads;	
Threads in inch system: ranging from 3/4 to 68 threads per inch, i. e. 58 threads.	

Threads with lead screw in inch system:

(normally furnished in U.S.A., Canada etc.)

The following cog wheels are set on the Lathe	30, 32, 60 and 64
additional	27, 33, 35, 36, 40, 42, 51, 52, 54, 57, 63, 66, 69, 75, 80
and	37, 38, 47
With the above gears 70 threads from 1/2 to 60 threads per inch can be cut, incl. pipe threads of 11 1/2, 14, 18 and 27 threads per inch;	
42 metric threads from 0.75 mm. to 22 mm. pitch and 42 Modul threads from 0.375 mm. to 11 mm. can also be cut with the same gear set.	

The Standard Equipment

of the Lathe consists of:

Complete electrical equipment according to U.S.A.-Standards and C.S.A. (Canada);

Driving plate;

Reducing bushing for headstock;

2 centres;

Chip pan;

5 change gears for metric system or

4 change gears for inch system (on the Lathe);

1 set of screw-wrenches incl. for sockets;

The motor and its controls will be furnished for A.C. three phase 220/440 volts, 60 cy. (U.S.A.) or normally 220/380 volts, 50 cy. if desired also for 500 or 550 volts, 50 or 60 cycles.

Extra Equipment (not included in normal price):

Face plate 350 mm. (13 3/4") diameter;

Three-jaw chuck 190 mm. (7 1/2") diameter if desired 200 mm. (8") or 230 mm. (9") diameter (chucks bigger than 9" diameter must not be used);

Steady rest;

Follower rest;

Live center;

Water coolant system;

12 additional change gears for metric system or

17 additional change gears for inch system;

Taper turning attachment;

Thread chasing dial;

Fourway tool-post turret or

Standard tool-post (U.S.A.).

Technical Data:

SWING 16 1/2"	DA 1		DA 1.5	
	mm.	inch.	mm.	inch.
Centre height over bed	200	7 7/8	200	7 7/8
Centre height over carriage	125	4 7/8	125	4 7/8
Max. turning diameter over gap	460	18	560	22
Width of gap	220	8 5/8	220	8 5/8
Max. turning length	1000	39 3/8	1500	59 1/8
Length of bed	2000	78 3/4	2500	98 1/2
Width of bed	330	13	330	13
Height of bed	300	11 7/8	300	11 7/8
Diameter of spindle bore	36	1 7/16	36	1 7/16
Diameter of spindle in front roller bearing	60	2 3/8	60	2 3/8
Diameter of dead centre socket	50	2	50	2
Travel of dead centre socket	120	4 3/4	120	4 3/4
Spindle taper	Morse 5		Morse 5	
Taper in dead centre socket	Morse 3		Morse 3	
Weight approx.	2140 lbs.		2650 lbs.	

Subject to modifications of design!

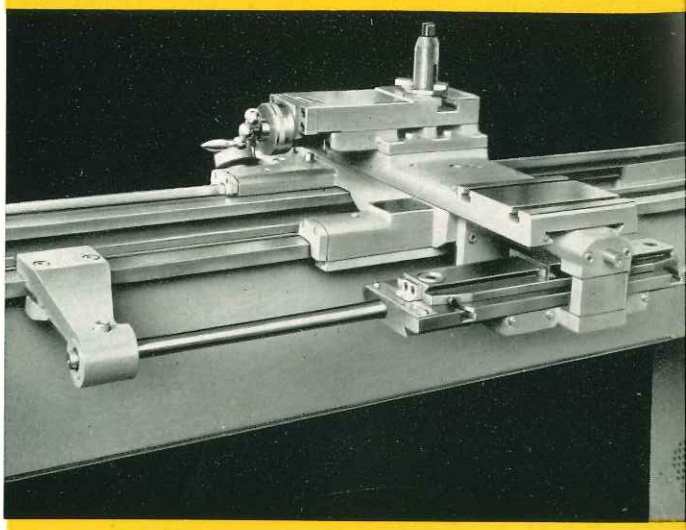

Taper turning attachment

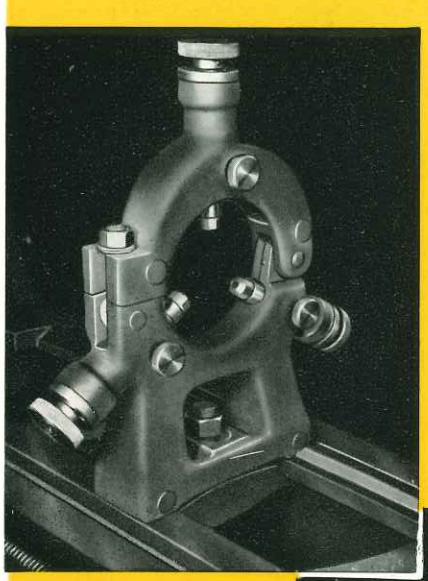

Steady rest

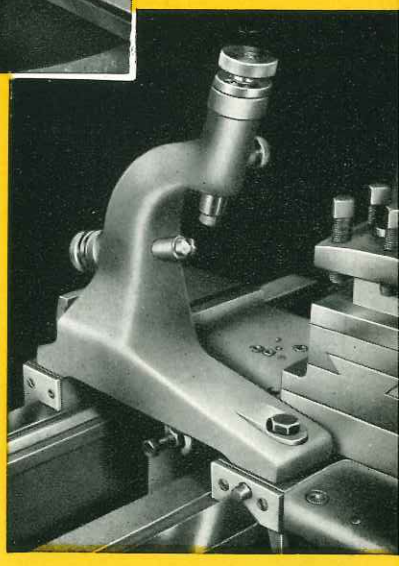

Follower rest

VÖEST-lathes produced in series

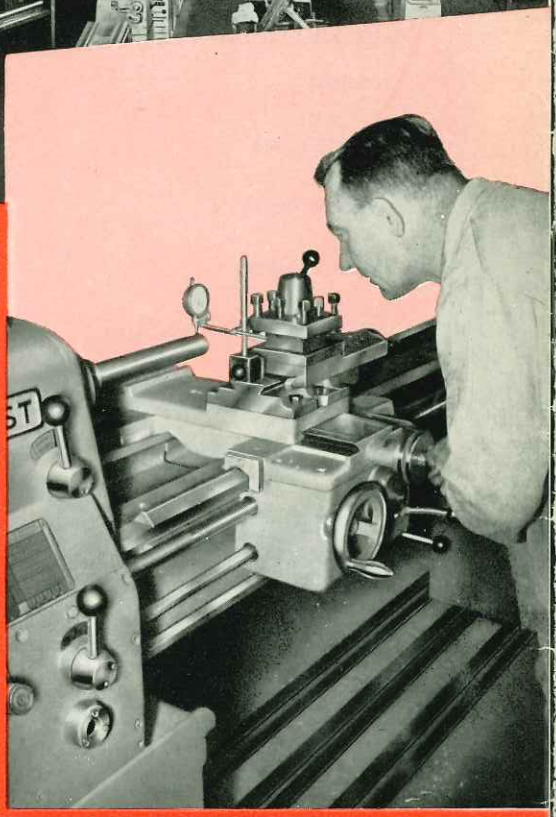

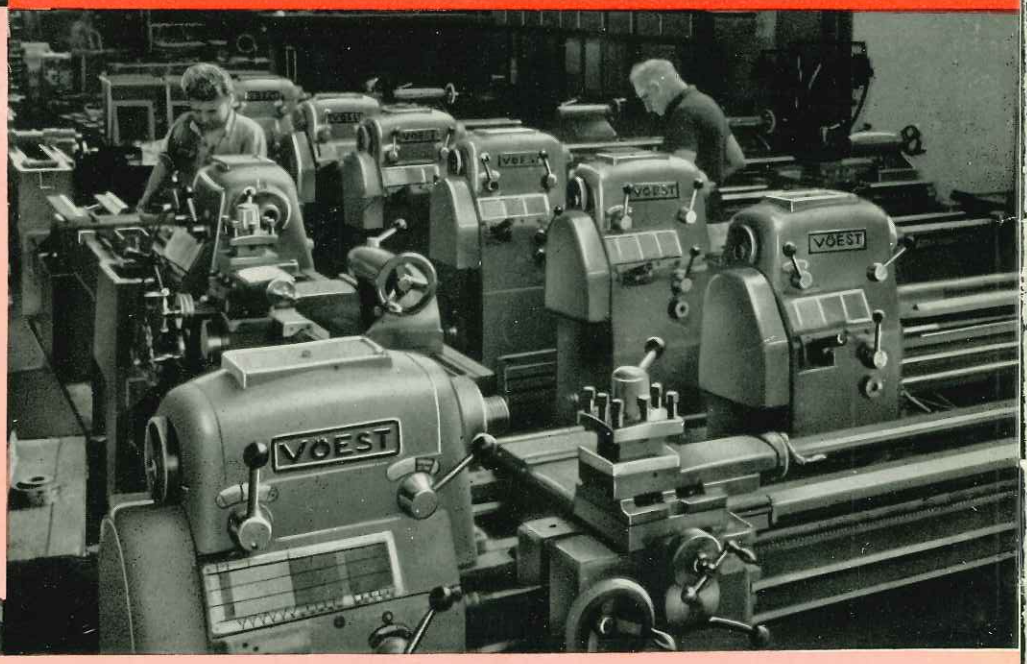

VEREINIGTE ÖSTERREICHISCHE EISEN- UND STAHLWERKE · LINZ-DONAU

HEAD OFFICE AND WORKS: Linz-Donau, Muldenstraße 5 — Phone: 2-91-11 — Telegrams: "VÖEST Linz" — Teletype: 02 219
FACTORY LIEZEN: Liezen, Steiermark — Phone: 67 and 69 — Teletype: 03 333
VIENNA OFFICE: Wien I., Rathausplatz 4 — Phone: A 22-5-85 — Telegrams: "VÖEST Wien" — Teletype: 011 833
OFFICE IN GERMANY (FEDERAL REPUBLIC OF GERMANY): VÖEST G. m. b. H., Frankfurt/Main, Kaiserstraße 13
Phone: 9-10-45 — Telegrams: "VÖEST Frankfurt/Main" — Teletype: 041 2178
OFFICE IN ITALY: VÖEST Italiana S. r. l., Milano, Via Senato 11 — Phone: 709.941/942 — Telegrams: "VÖESTITAL Milano"

Printed in Austria MB 4-153/5 E — 2.56. — 10.000 Druck: J. Wimmer, Linz

Machine Tool Show, Sheba, Pa.
May 1st, 1958